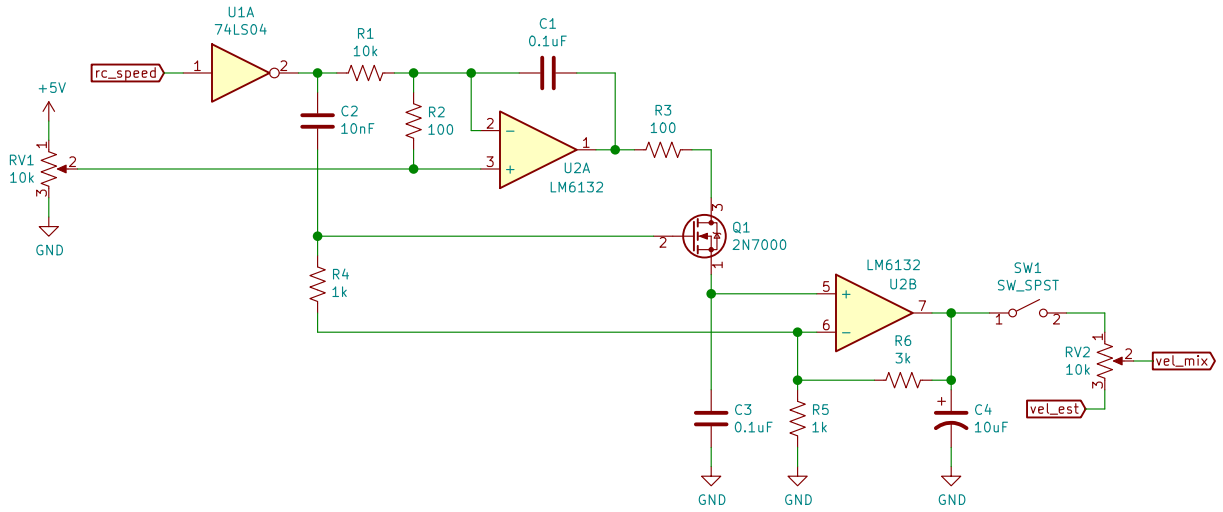

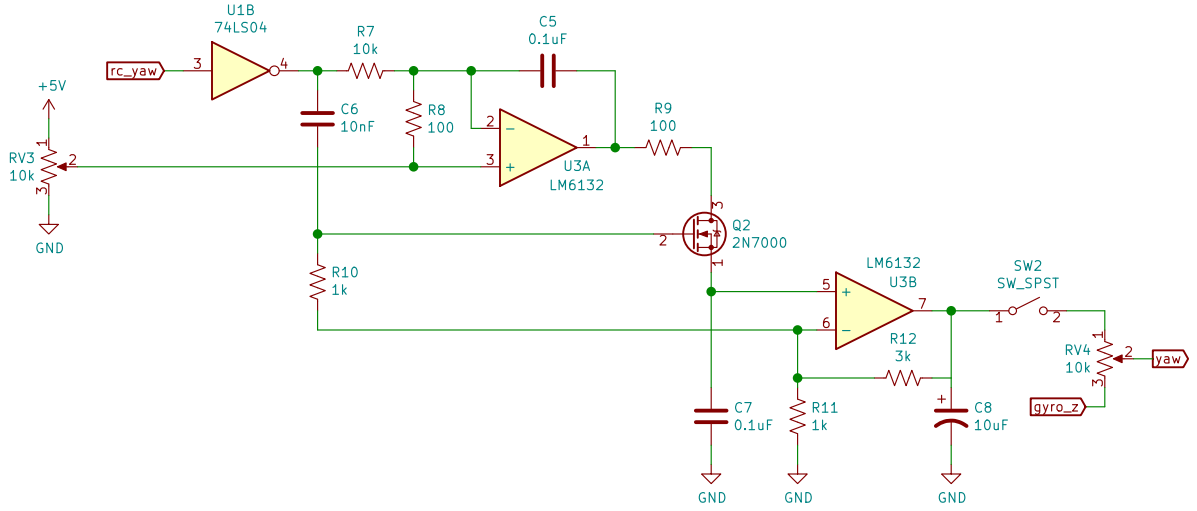

Sheet: /receiver/
File: receiver.sch

Title: Radio Receiver Decoder

Size: USLetter	Date: 2019-05-13	Rev:
KiCad E.D.A. kicad 5.0.2+dfsg1-1		Id: 3/4